Class 1
Building Product Information Sheet

About this form

This template has been developed to help manufacturers and importers into Aotearoa New Zealand provide the information required by the **Building (Building Product Information Requirements) Regulations 2022**.

How to use

- Download and save this form in your computer.
- Fill out the form with the relevant information about your product.
- You may use this filled out form and publish it on your product web page.

Types of building products

There are two classes of designated building products with different information requirements for each. The below summarises the information that must be provided for each class of product and when the information must be made available.

Class 1: Batch or mass-produced products

Batch or mass-produced products that are typically available for retail or wholesale purchase. For example, cladding products, mechanical fixings, insulation products, internal lining, roofing products, structural wood-based products, structural steel and reinforcing products, sanitary plumbing, and drainage products, including tapware (note: this is not an exhaustive list).

Class 2: Custom-made lines of products

Custom-made lines of products that are made to order to client specifications. For example, external window joinery and doors that have been customised to the specifications of individual clients (for example, specifications on dimensions and glass type).

MBIE provides resources to support manufacturers, importers, wholesalers, distributors, and retailers to understand what their obligations are, and how to meet them.

For more information, visit **Building product information requirements | Building Performance**

Background

The Building Amendment Act 2021 introduced new minimum information requirements for building products to support better informed decision-making by building consent authorities, building owners, builders, and designers. The new regulations designate several building products for which building product information must be provided and establish the minimum requirements for that information.

The new regulations will ensure better and more consistent information is available for these products, helping inform building consent authority decisions on building consent applications. This should result in fewer requests for information, and therefore faster processing times. In addition, the requirements will ensure people, including homeowners, are given the information they need to make good decisions about products, and use and maintain them as intended.

Please note that The Ministry of Business, Innovation and Employment (MBIE) is not responsible for the input details provided in the template.

Class 1
Building Product Information Sheet

Product name *(include the brand name)*:

DPA 20 - Ductile Panel Connection Anchor

Product description and its intended use *(measurements, materials, usage)*:

Metal fixing for connecting bolts to precast concrete structure.The fixing is cast into a precast concrete structural element

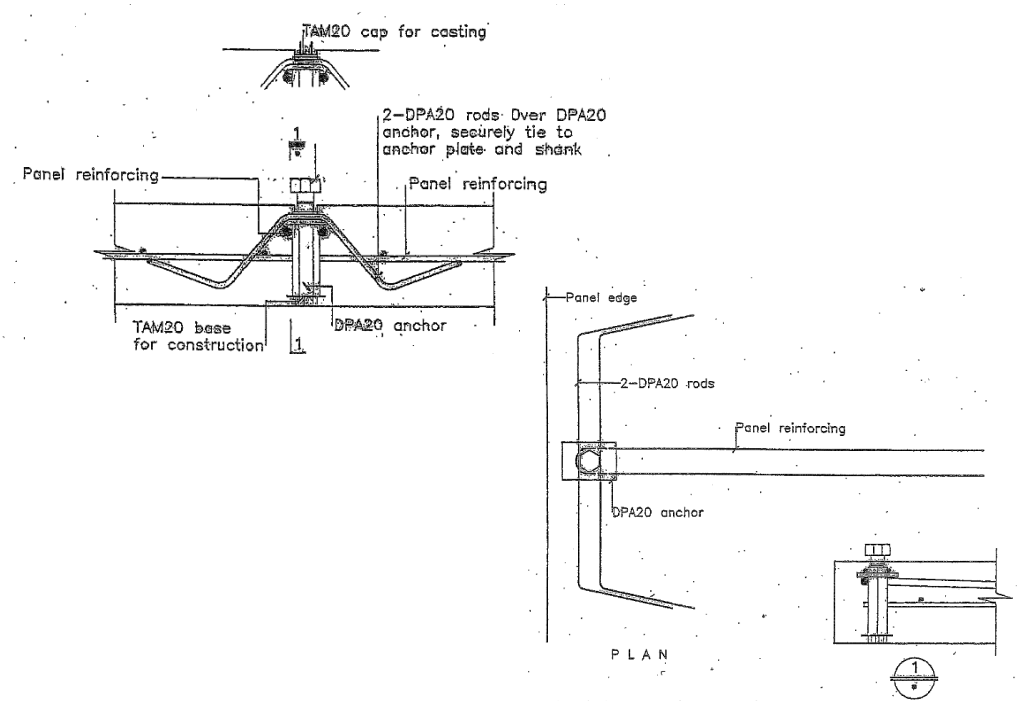

The fixing is designed for use in 100mm, 120mm, 150mm, 175mm and 200mm thick precast concrete wall elements

Product identifier *(if applicable)*:

DPA20/102 DPA20/132 DPA20/82

(This could be a Global Trade Item Number (GTIN) or quick response code (QR code), or any other distinguishable part/model number or identifier.)

Place of manufacture: ☑ Aotearoa New Zealand ☐ Overseas

Legal and trading name of the manufacturer(s):

Concrete Systems Limited

Address for service:

STREET NAME	Rhodes & Co	SUBURB	Christchurch
CITY, COUNTRY	Christchurch, New Zealand	POSTCODE	

Website: www.concretesystems.co.nz

Email address:

Phone no. *(if applicable)*: 03 366 0434

NZBN *(if applicable)*: 354956

Legal and trading name of the importer *(if applicable)*:

N/A

Address for service:

STREET NAME	N/A	SUBURB	N/A
CITY, COUNTRY	N/A	POSTCODE	N/A

Website: N/A

Email address: N/A

Phone no. *(if applicable)*: N/A

NZBN *(if applicable)*: N/A

Relevant Building Code clauses:

New Zealand Building Code Clause: B1 Structure
New Zealand Building Code Clause: B2 Durability

Statement on how the building product is expected to contribute to compliance:

New Zealand Building Code Clause B1/VM1
The DPA Anchor provides a means to connect a precast concrete element to a structural frame work by way of bolting. The anchor is designed to provide a ductile failure response.
Product specification shall be by a New Zealand Chartered Professional engineer experienced in the design of precast concrete structures.

- *options for compliance set out in section 19 of the Act (regulations, acceptable solution, verification method)*
- *standard or technical document that describes the performance of the building product or the relevant specifications to which the building product was manufactured*
- *physical properties of the building product*
- *how the building product is intended to be used.*

Limitations on the use of the building product:

- Fixing method shall be M20 Grade 4.6 or 8.8 bolt complying with New Zealand Building Code
- Specification of product shall be by a Chartered Professional Engineer experienced in the design of precast concrete structures.
- Edge distance within a concrete wall shall be no less than 52mm
- Spacing shall be no less than 400mm
- Concrete wall thickness shall be no less than 100mm
- Concrete wall strength shall be no less than 25MPa at 28 days

Design requirements that would support the appropriate use of the building product:

- ØN* = 20KN
- Edge Distance ≥ 52mm
- Concrete wall thickness ≥ 100mm
- Wall concrete strength ≥ 25MPa at 28 days
- Design loads to be based on arts and components in accordance with B1/VM1

Installation requirements *(also provide link to the product installation guide)*:

DPA 20 Installation Information

1.Assemble DPA20 components. Screw TAM20 plastic base and top cap into DPA shaft component. Tie 2 DPA20 rods over anchor as shown above. Ensure DPA20 rods are tied securely to the anchor plate and shank.
2.Position fixing in mould. Place any panel reinforcing that may be specified by the designer.
3.Cast and compact concrete thoroughly around fixing. Take care not to displace fixing position or alignment.
4.On placing panel, locate and remove top cap to expose anchor. Insert M20 bolt and fix as per designer's drawings and specification.
NOTES: All workmanship and materials to comply with the New Zealand Building Code.
Where fixing is called up as far face, the entire assembly is to be installed upside-down. When ordering, contractor must specify DPA20 shaft length:
—82mm for 100mm panels
—102mm for 120mm panels
—132mm for 150mm or greater panels

Maintenance requirements *(also provide link to the product maintenance guide)*:

Provided the product is installed in accordance with the manufacturers written instructions, design life is 50 years

Is the building product/building product line subject to warning or ban under section 26 of the Building Act 2004?:

☐ Yes ☑ No

If yes, description of the warning or ban under section 26:

Version: 1

Date: 0 1 1 2 2 3